ASSEMBLY DRAWING FOR AQUA 'STS' BASIC BENCH

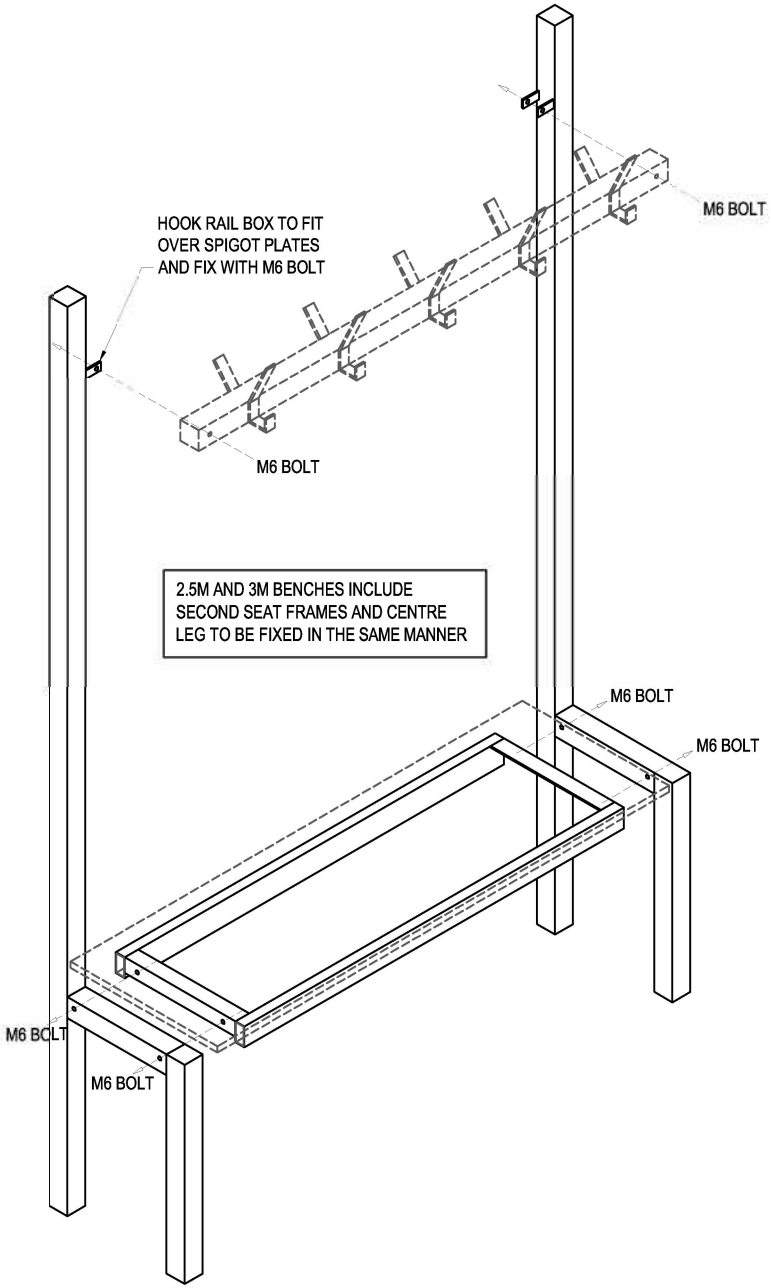

Benchura

No unauthorised disclosure, reproduction or manufacture of details or product permitted without prior written consent.